210x148.5mm

GLOBO LIGHTING

# 33414Q-2

**1**

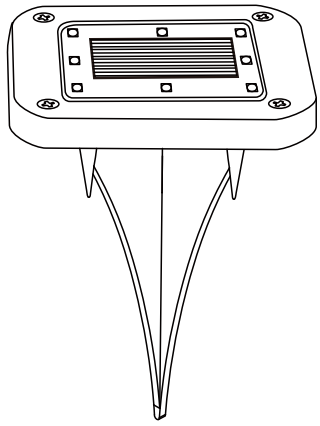

**2**

8 x max 0.1W 3V LED

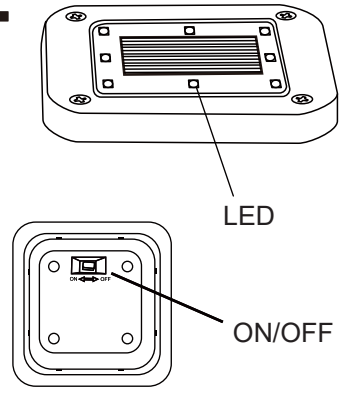


**3**

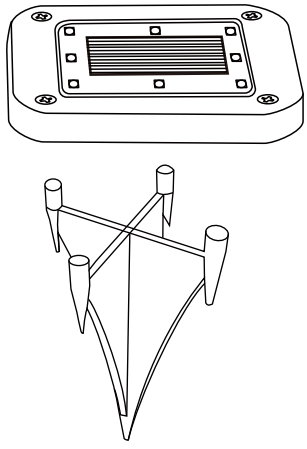

**4**

Battery Replacement Instructions: /
Anleitung zum Akkuwechsel:

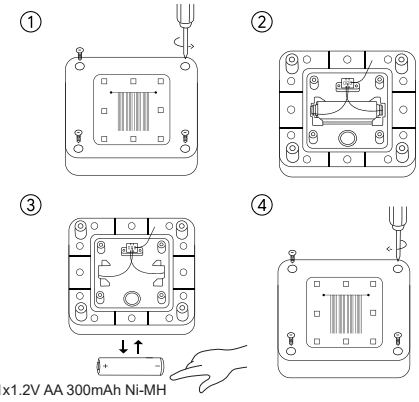


1x1.2V AA 300mAh Ni-MH
rechargeable battery

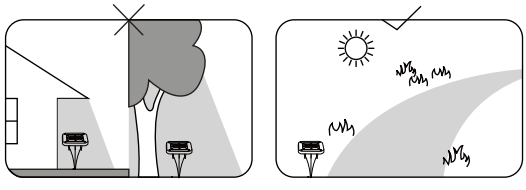

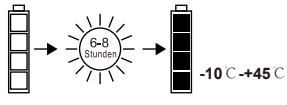


LED | SOLAR | ~6-8 hours | IP44 | AKKU incl.

GLOBO Handels GmbH
Gewerbestrasse 3
A-9184 Sankt Peter
AUSTRIA
www.globo-lighting.com
office@globo-lighting.com